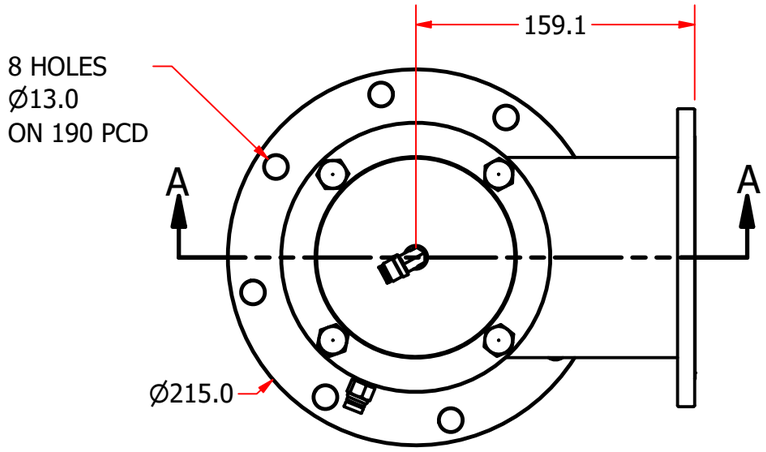

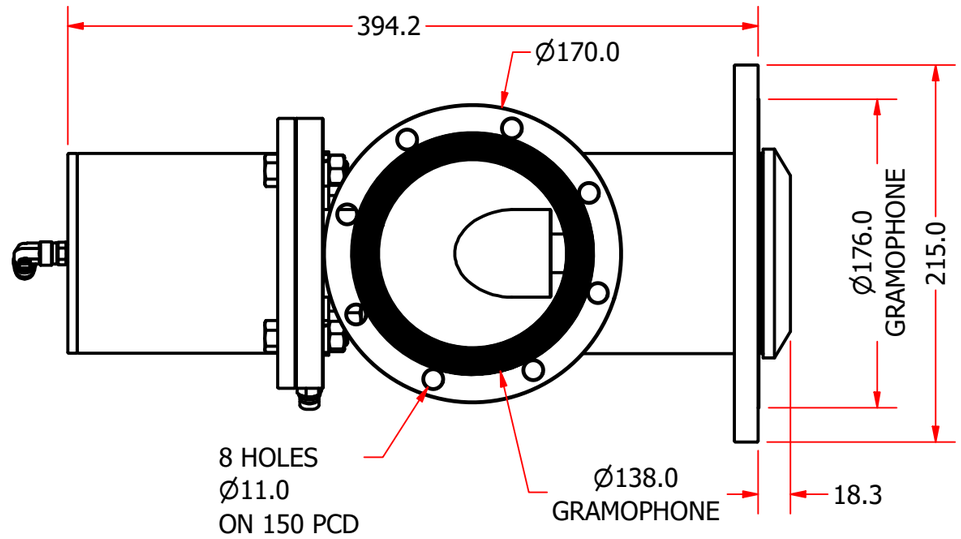

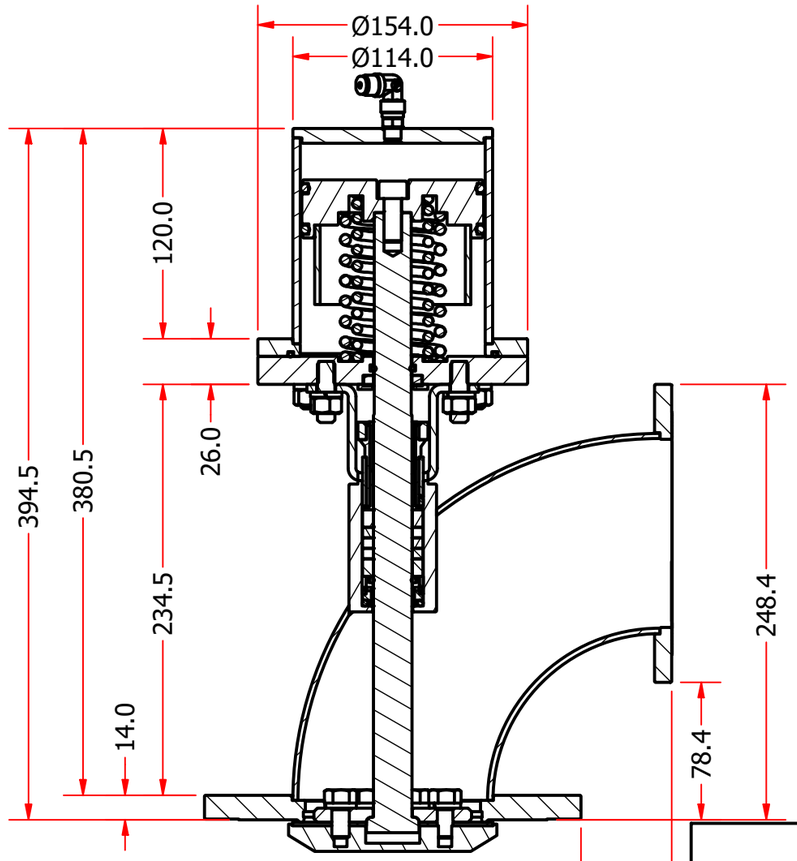

SECTION A-A
SCALE 1 / 3.5

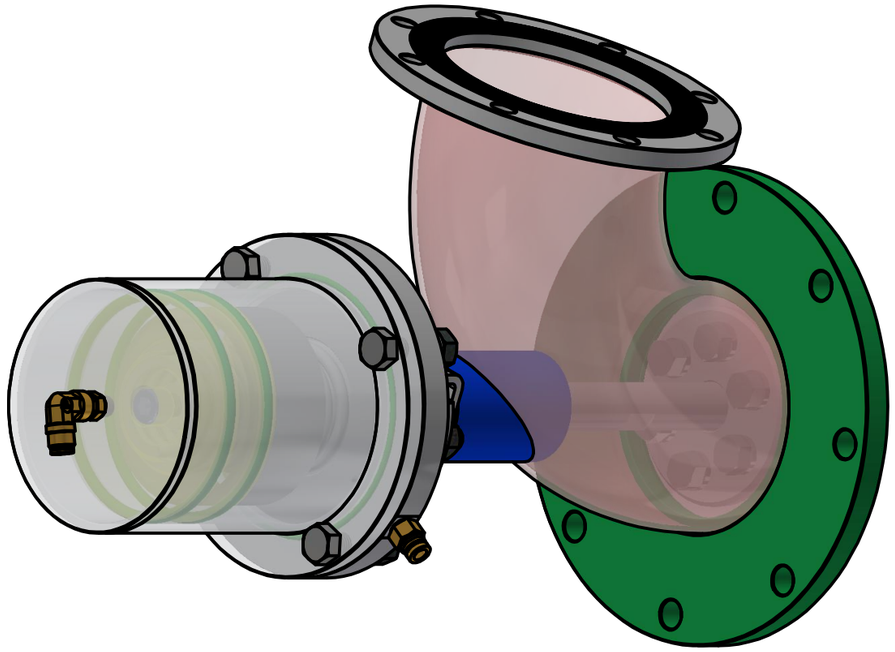

NO TRANSFER OF INTELLECTUAL PROPERTY : Any & all drawings, documentation, information or data provided by AMF to be used solely for the use intended by AMF,nor may it be shared, copied, distributed or disseminated in any manner whatsoever. All intellectual property, including AMF's drawings,shall remain the sole property of AMF.

AMF
ALLGEMEINE MASCHINEN FABRIK

APPROVED
R.P.M.J.

TITLE
FLUSH VALVE 100mm PNEUMATIC
GENERAL ARRANGEMENT

SIZE	DWG NO	REV
A3	AMF_FV_100_90_GS_FL_PN_V2_MS	

SCALE 1 : 1 SHEET 1 OF 1