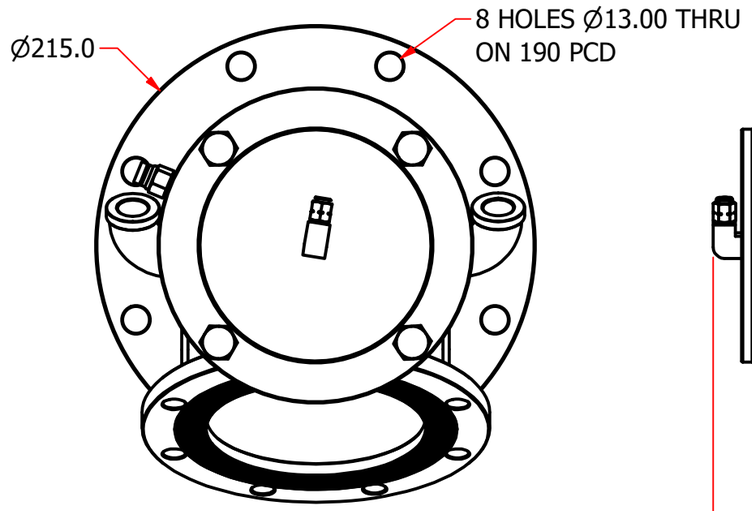

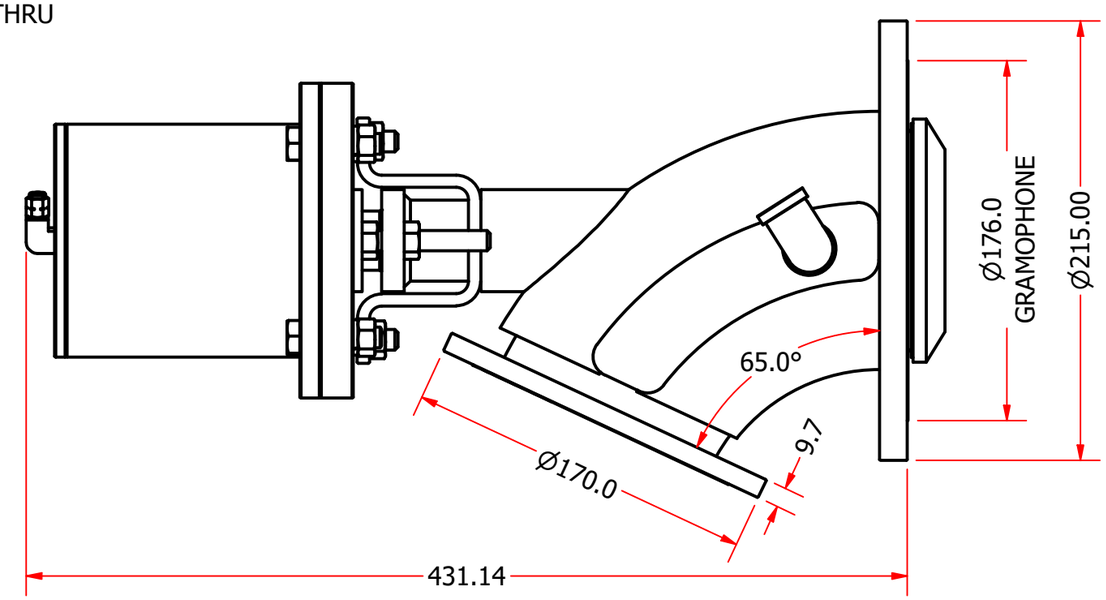

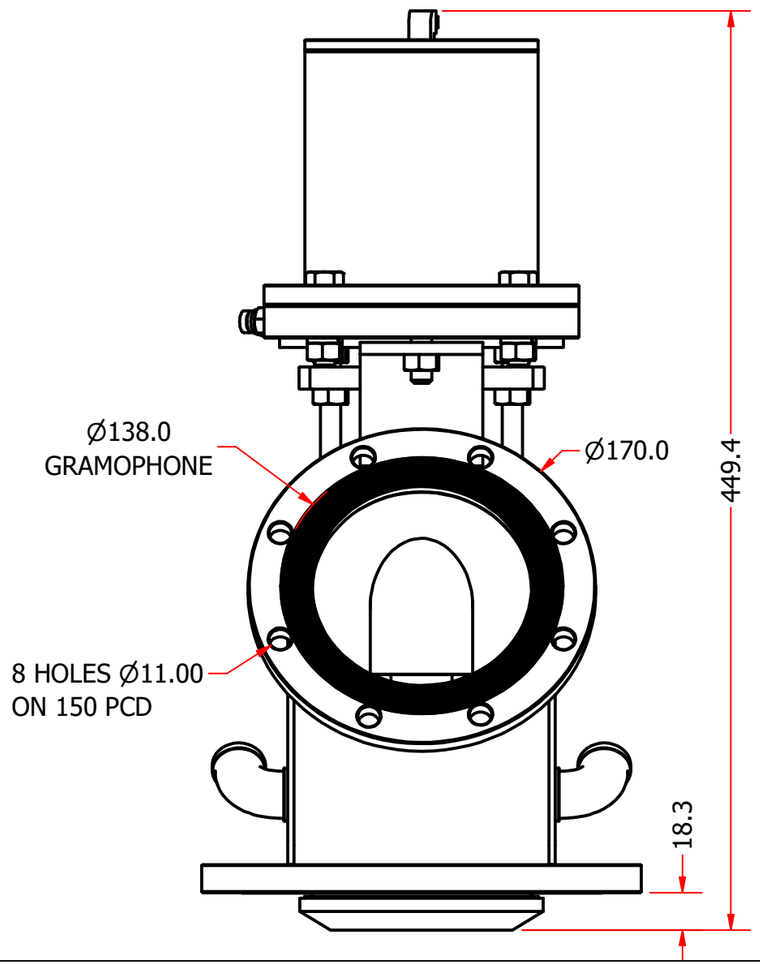

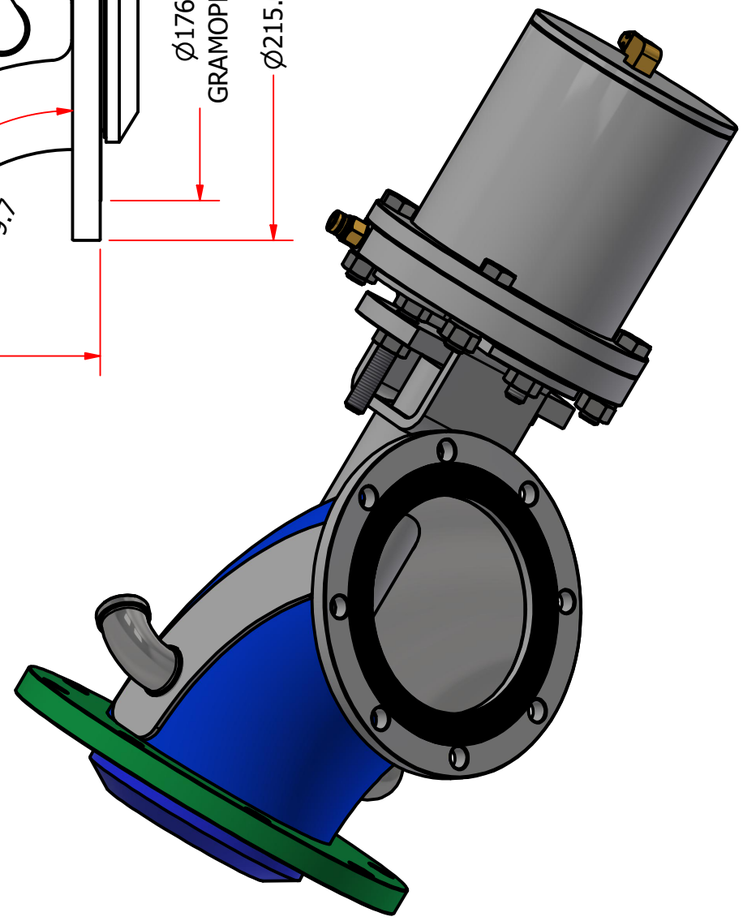

TEST FLUID: WATER

SHELL TIGHTNESS TEST:
TEST PRESSURE: 200 kPa
TEST DURATION: 5 MIN

SEAT TIGHTNESS TEST:
TEST PRESSURE: 20 kPa
TEST DURATION: 5 MIN

STEAM TIGHTNESS TEST:
TEST PRESSURE: 200 kPa
TEST DURATION: 5 MIN

NO TRANSFER OF INTELLECTUAL PROPERTY : Any & all drawings, documentation, information or data provided by AMF to be used solely for the use intended by AMF,nor may it be shared, copied, distributed or disseminated in any manner whatsoever. All intellectual property, including AMF's drawings,shall remain the sole property of AMF.

AMF
ALLGEMEINE MASCHINEN FABRIK

APPROVED
R.P.M.J.

TITLE
100mm STEAM JACKET
GENERAL ARRANGEMENT

DWG NO
AMF_FV_100_60_GS_FL_PN_SJ_316L

REV

SCALE 1 : 1

SHEET 1 OF 1